Spare Part Book

ATV SNPL

GEO _ macchine _ agricole

Table of Contents

Tavola	Page
ATV SNPL part1	3

GEO_macchine_agricole

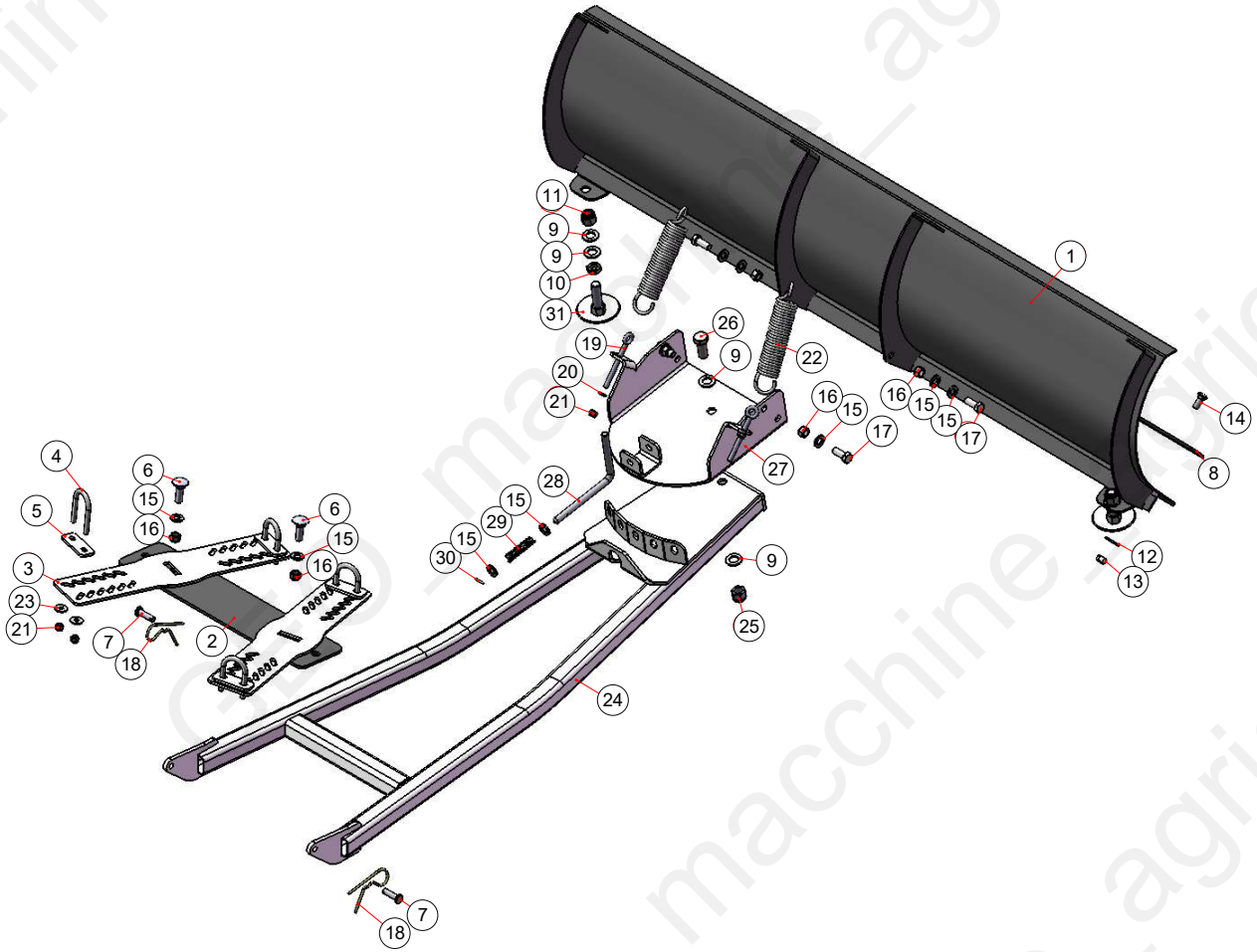
1
2
3
4
5
6
7
8
9
10
11
12
13
14
15
16
17
18
19
20
21
22
23
24
25
26
27
28
29
30
31

Machine: ATV SNPL

Assembly: ATV SNPL part1

Pos	Code	Description	NOTE	Q.
1	ASPG150.013	Snow blade weldment		1
2	ASP150.012	Connecting plate		1
3	ASP150.106	Fixing plate		2
4	ASP150.108	U bolt		4
5	ASP150.107	Spacer		4
6	GB/T14-1988	Step bolt M12*30		2
7	ASP150.104	Connecting pin		2
8	ASP150.105	Pressure plate		1
9	GB/T95-2002.1	Plain washer 12		6
10	GB/T6172.1.M16.2	Hexagon thin nut M16		2
11	GB/T6182-2010	Lock nut M16		2
12	GB/T96.2-2002.1	Plain washer 10		7
13	GB/T889.1-2000.1	Lock nut M12		7
14	GB/T801-1998	Step bolt M10*25		7
15	GB/T95-2002.2	Plain washer 16		10
16	GB/T889.1-2000.2	Lock nut M16		6
17	GB/T5783-2000.1	Bolt M12*35		4
18	diam3	R pin		2
19	ASP150.109	Swing bolt		2
20	GB/T95-2002.3	Plain washer 22		2
21	GB/T889.1-2000.3	Lock nut M8		10
22	ASP150.111	Tension spring		2
23	GB/T96.2-2002.2	Big plain washer 8		8
24	ASPG150.010	Bracket weldment		1
25	GB/T889.1-2000.4	Lock nut M16		1

GEO _ macchine _ agricole

Pos	Code	Description	NOTE	Q.
26	GB/T5783-2000-2	Bolt M16*40		1
27	ASPG150.011	Connecting weldment		1
28	ASPG150.101A	Handle		1
29	ATV120.110	Pressure spring		1
30	GB/T879.2.2000	Elastic cylindrical pin 3*22		1
31	ASP150.013	Adjusting bolt		2

GEO _ macchine _ agricole